STEINIE 0.330



KMC
GLASS

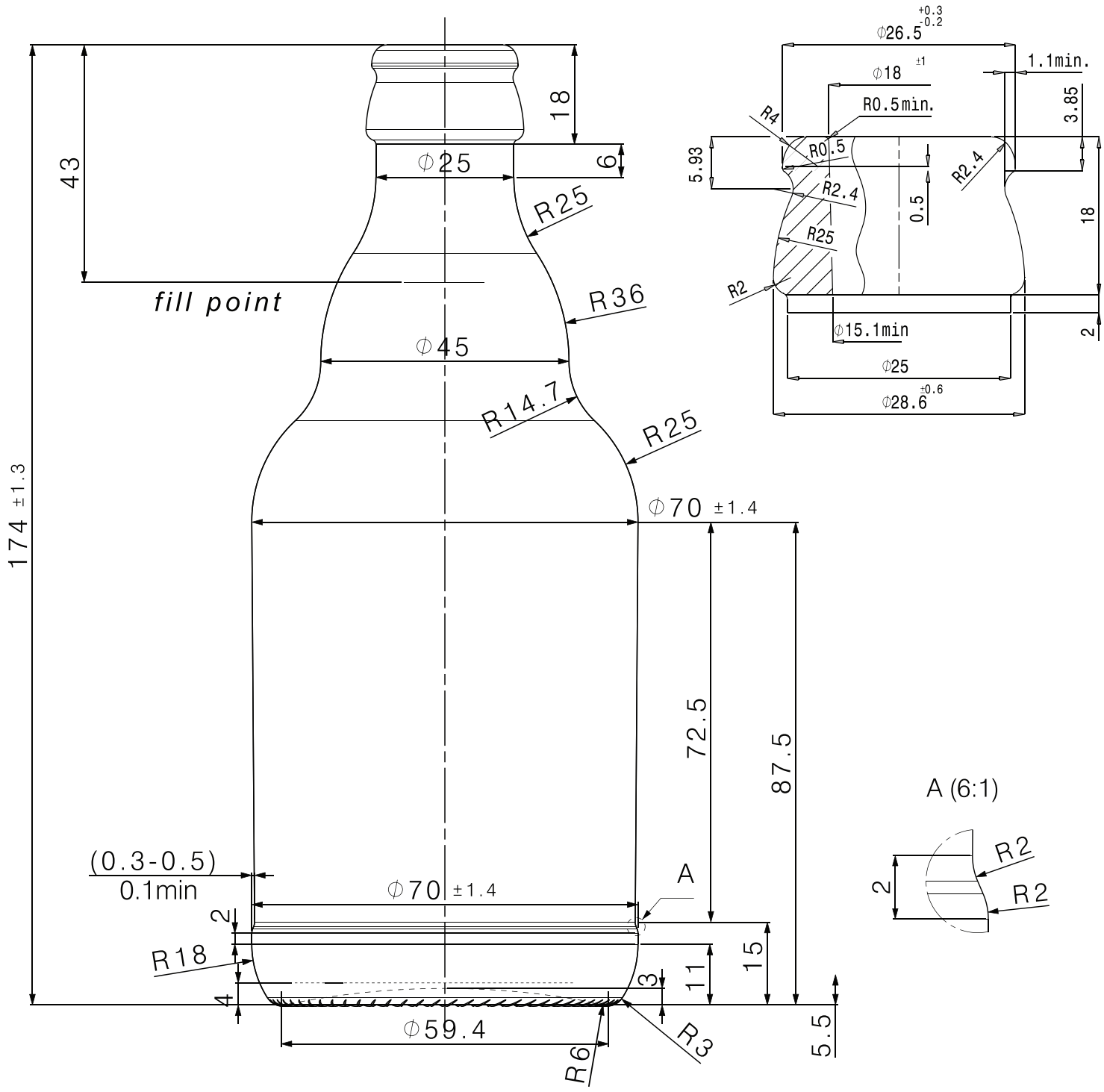

- Steinie
- Filling CAP - 330 ml
- Weight - 274 g
- Height - 174±1.3 mm
- Diameter - 70±1.4 mm
- Finish - A 26 DIN 6094-1
- Color - Amber

www.kmc.glass
sales@kmc.glass

KMC GLASS